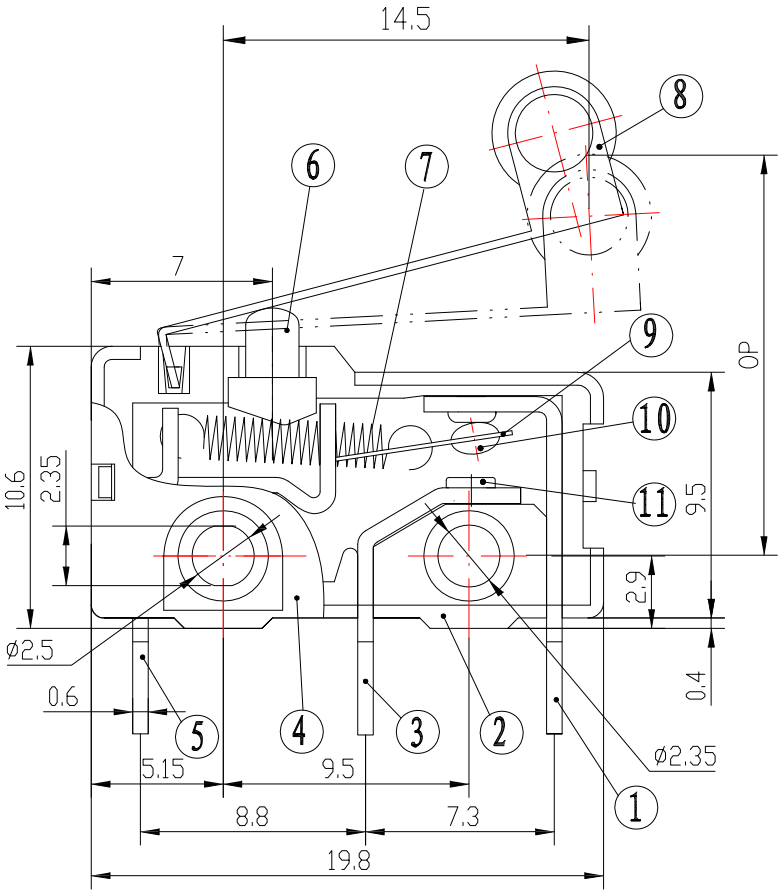

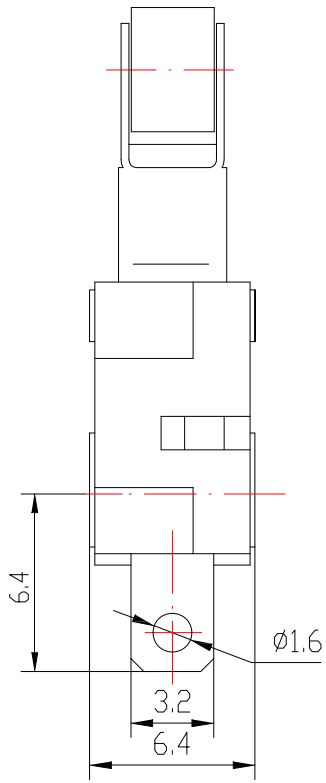

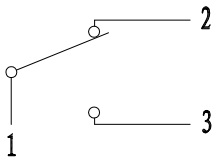

SCHEMATIC

1. SPECIFICATION.

RATINGS TEMPERATURE ELECTRONICAL LIFE	5(2)A 125 / 250 V AC 5GPA 125 / 250V AC 1 / 4 hp 250V AC 4A 30VDC 25T125 5E4 IP40 25T125 5E4 50~60Hz IP40
Insulation resistance	100 MΩ Min
Test voltage	AC 1000 / 1500V
Contact resistance	50 mΩ Max
Operating force	1.2 N Max
Release force	0.5 N Max
Operating position	15.2 ± 1.0mm

2. MATERIAL.

1	NC TERMINAL	Brass , Silver Plated
2	CASE	PBT (Black)
3	NO TERMINAL	Brass , Silver Plated
4	COVER	PBT (Black)
5	TERMINAL	Brass , Silver Plated
6	PLUNGER	PPS
7	PULL SPRING	SUS
8	MOVING ARM	SUS
9	MOVING PIECE	Tin-Brass
10	CONTACT	AgNi10
11	CONTACT	AgNi10

ITEM NO.	DESCRIPTION	DRAWN	DATE

東莞市高迪電子有限公司
DONG GUAN GAO DI ELECTRONICS CO., LTD

TOLERANCE UNLESS OTHERWISE STATED : Up to 5 ± 0.2; Above 5 ~ 15 ± 0.3; Above 15 ~ 30 ± 0.4; Above 30 ~ 50 ± 0.5; Angle ± 0.3°

3RD. ANGEL'S | UNITS MM

DRAWN BY: Jack Lu	DATE 07/24/15	MAT'L		TITLE	SWITCH		
CHECKED BY: Jacky Chen	DATE 07/24/15	FINISH		MODLE	MICRO SWITCH		
APPROVED BY: Tony Kao	DATE 07/24/15	SCALE	1 : 1	DWG NO.	SM5-05N-50-S146	SIZE	A4
		SHEET NO.	1 of 1	PART NO.	SM5-05N-50-S146	VER	R