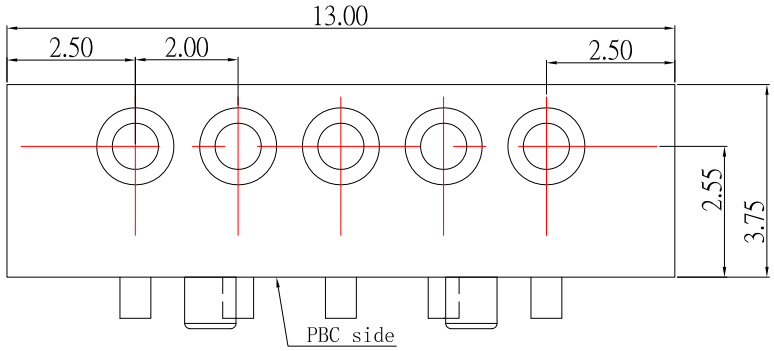

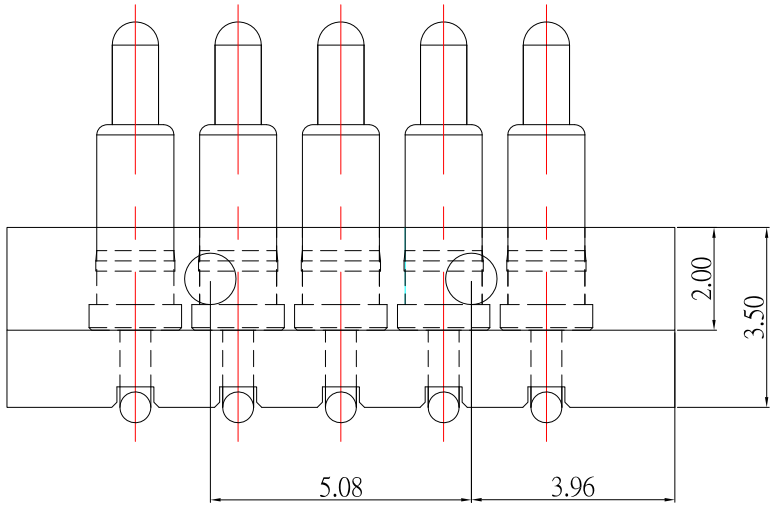

NOTE

1.Material
Plunger: Brass
Barrel: Brass
Spring: SUS
Housing: PA46

2.Plating
Plunger:Au over NI
Barrel: Au over NII

3.Electrical
Rated current & voltage: DC 12V; 1.0A Max.

4.Mechanical
Spring force: 60g±20% at normal working height
Durability: 10,000 cycles(minimum)

5.To ensure the best usage,please operateit based on the working height
Based on the engineering drawings,shall not exceed the maximum allowed compression

6.To avoid arcing issue, The adaptor startto power supply after connector mated fully.

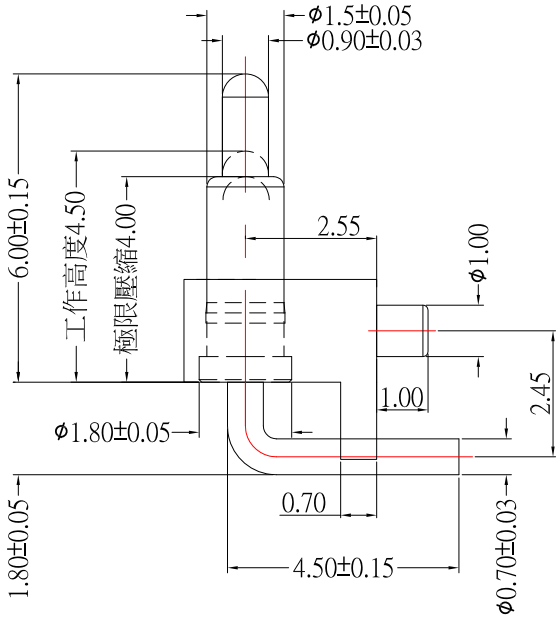

ITEM NO.	DESCRIPTION	DRAWN	DATE
2	新增尺寸	Jack	111920
1	新增尺寸	Jack	111820

東莞市高迪電子有限公司
DONG GUAN GAO DI ELECTRONICS CO., LTD

TOLERANCE UNLESS OTHERWISE STATED : Up to 5 ±0.2; Above 5 ~ 15 ±0.3; Above 15 ~ 30 ±0.4; Above 30 ~ 50 ±0.5; Angle ±0.3°

3RD. ANGEL'S | UNITS | MM

DRAWN BY: Jack Lu	DATE 11/19/20	MAT'L	
CHECKED BY: Jacky Chen	DATE 11/19/20	FINISH	
APPROVED BY: Tony Kao	DATE 11/19/20	SCALE 1 : 1	SHEET NO. 1 of 1

TITLE	CONNECTOR		
MODLE	POGO PIN		
DWG NO.	PGC-187820A-5P-S353	SIZE	A4
PART NO.	PGC-187820A-5P-S353	VER	R2