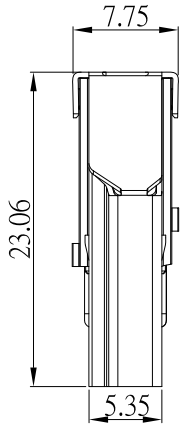


| HDMI PIN ASSIGNMENT | | | |
|---|---|---|---|
| PIN | SIGNAL TYPE | 11 | TMDS Clock Shield |
| 1 | TMDS Data2+ | 12 | TMDS Clock− |
| 2 | TMDS Data2 Shield | 13 | CEC |
| 3 | TMDS Data2− | 14 | Utility |
| 4 | TMDS Data1+ | 15 | SCL |
| 5 | TMDS Data1 Shield | 16 | SDA |
| 6 | TMDS Data1− | 17 | DDC/CEC Ground |
| 7 | TMDS Data0+ | 18 | +5V Power |
| 8 | TMDS Data0 Shield | 19 | Hot Plug Detect |
| 9 | TMDS Data0− | | |
| 10 | TMDS Clock+ | | |

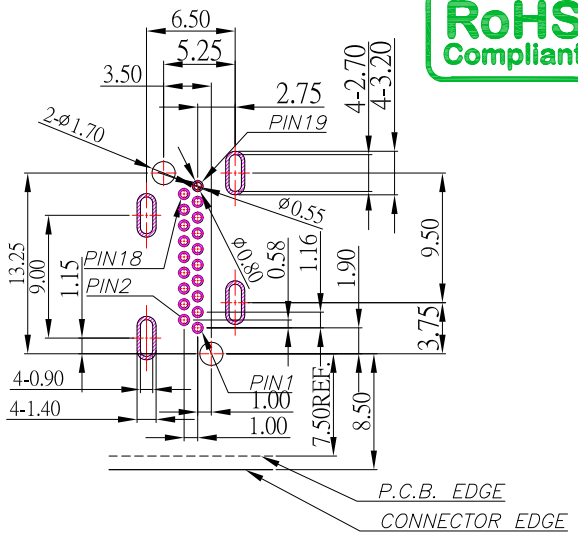


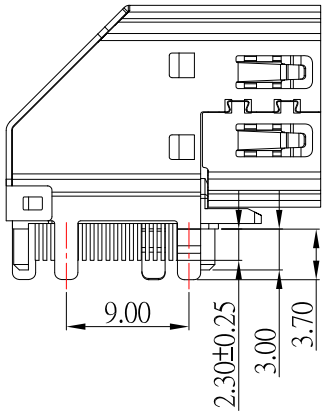


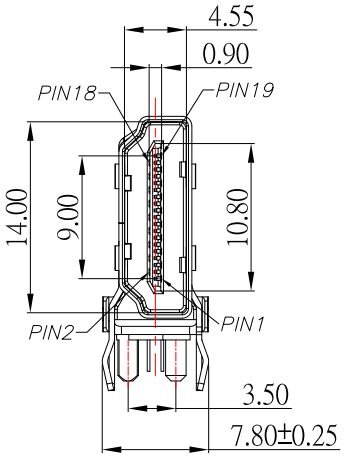


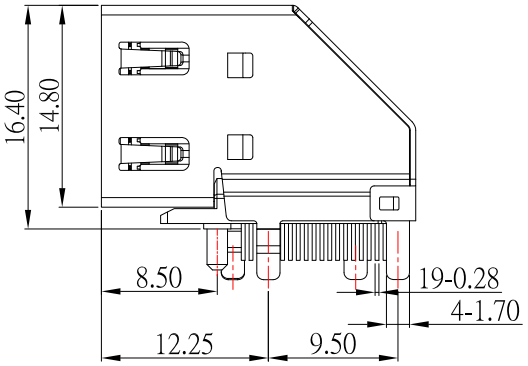


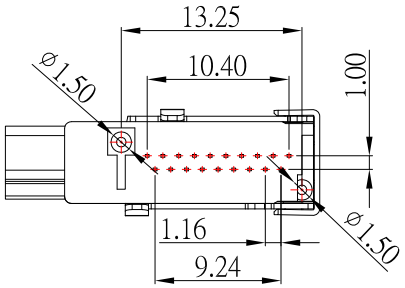


## RECOMMENDED P.C.B. LAYOUT
TOP VIEW

NOTE:

1.MATERIAL:
- 1.1 HOUSING: LCP, BLACK
- 1.2 CONTACT: BRASS
- 1.3 SHEEL: BRASS

2.PLATING :
- 2.1 CONTACT: PLATED GOLD IN MATING AREA ;
  TIN PLATED ON SOLDER BALLS ;
  NICKEL UNDER PLATED OVERALL
- 2.2 SHELL: NICKEL UNDER PLATED SURFACE LAYER

3.MECHANICAL:
- 3.1 INSERTION FORCE: 4.5 Kgf MAX
- 3.2 WITHDRAWAL FORCE: 1.0 ~ 4.0 Kgf

4.ELECTRICAL:
- 4.1RATING: 40V,0.5A
- 4.2 CONTACT RESISTANCE: 30 mΩ Max
- 4.3 INSULATION RESISTANCE: 100MΩ Min
- 4.4 DIELECTRIC WITHSTANDING VOLTAGE: 500V AC / minute
- 4.5 OPERATING TEMPERATURE: -25°C~ 85°C

5.LIFE: 10,000 CYCLES

| ITEM NO. | DESCRIPTION | DRAWN | DATE |
|---|---|---|---|
| 3 | 新增LIFE | Jack | 051123 |
| 2 | 新增PIN定義 | Jack | 092922 |
| 1 | 更新PCB LAYOUT尺寸 | Jack | 092222 |

東莞市高迪電子有限公司
DONG GUAN GAO DI ELECTRONICS CO., LTD

TOLERANCE UNLESS OTHERWISE STATED : Up to 5 ±0.2; Above 5 ~ 15 ±0.3; Above 15 ~ 30 ±0.4; Above 30 ~ 50 ±0.5; Angle ±0.3°

3RD. ANGEL'S | UNITS | MM

| | | | |
|---|---|---|---|
| DRAWN BY: Jack Lu | DATE 05/11/23 | MAT'L | |
| CHECKED BY: Jacky Chen | DATE 05/11/23 | FINISH | |
| APPROVED BY: Tony Kao | DATE 05/11/23 | SCALE 1 : 1 | SHEET NO. 1 of 1 |

| | | | |
|---|---|---|---|
| TITLE | CONNECTOR | | |
| MODLE | HDMI2.1 側插殼銅殼2 K腳 2直腳 腳長 2.3 | | |
| DWG NO. | HD2-19PF-P1-S297 | SIZE | A4 |
| PART NO. | HD2-19PF-P1-S297 | VER | R3 |