IPX7

RoHS Compliant

SBC-WP160VS-20x-S165

鍍層厚度 :

Blank : 1u"
2 : 15u"
3 : 30u"

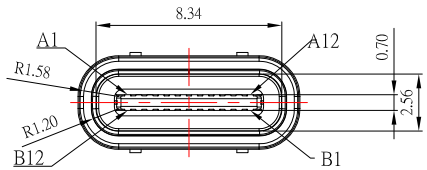

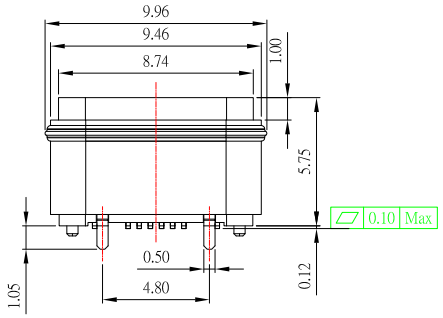

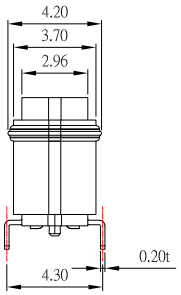

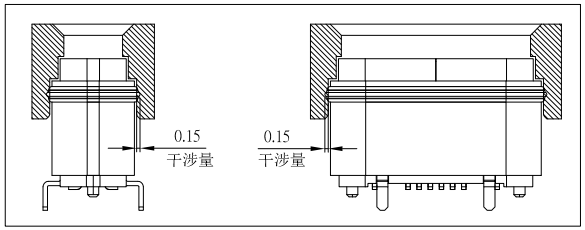

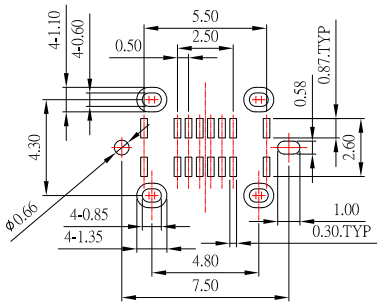

RECOMMENDED PCB LAYOUT

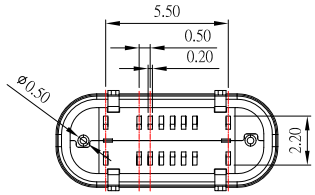

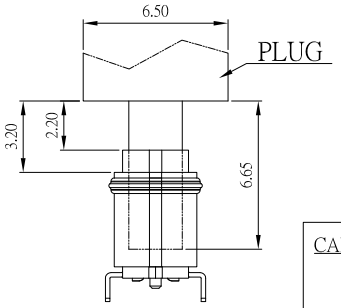

MATED CONDITION(REF.)

PIN ASSIGNMENT

PIN NUMBER	SIGNAL NAME	PIN NUMBER	SIGNAL NAME
A1	GND	B12	GND
A4	VBUS	B9	VBUS
A5	CC1	B8	SBU2
A6	D+	B7	D-
A7	D-	B6	D+
A8	SBU1	B5	CC2
A9	VBUS	B4	VBUS
A12	GND	B1	GND

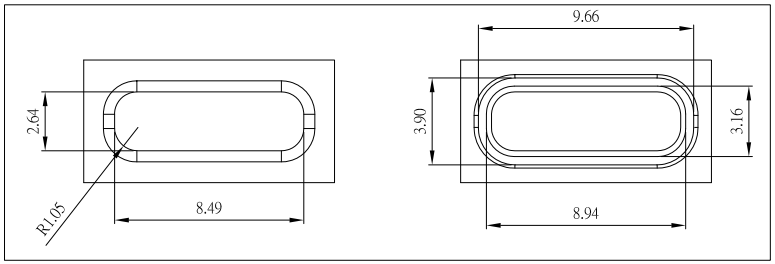

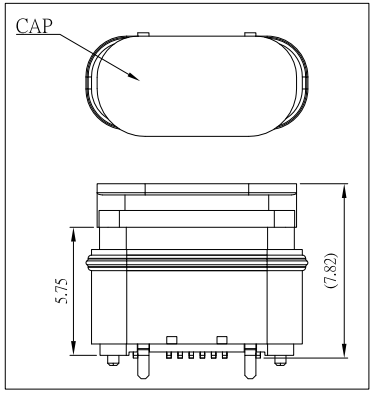

SPECIFICATIONS

Electrical:

1.Rating: 3.0 A

2.Contact Resistance: 50 mΩ Max

3.Insulation Resistance: 100 MΩ Min

Mechanical:

1.Connector Mate and Unmate Force

1.1 Mate force: 5~20 N

1.2 Unmate force: 8~20 N

Material:

1.Housing: LCP

2.Contact: C7025

3.Shell: SUS

Finish:

1.Contact: Plated Gold in Mating Area ;
Gold Plated on Solder Balls ;
Nickel under plated overall

2.Shell: Nickel under Plated surface layer

ITEM NO.	DESCRIPTION	DRAWN	DATE
1	更新圖面	Jack	031022

東莞市高迪電子有限公司
DONG GUAN GAO DI ELECTRONICS CO., LTD

TOLERANCE UNLESS OTHERWISE STATED : Up to 5 ±0.2; Above 5 ~ 15 ±0.3; Above 15 ~ 30 ±0.4; Above 30 ~ 50 ±0.5; Angle ±0.3°

3RD. ANGEL'S | UNITS | MM

DRAWN BY: Jack Lu	DATE 03/10/22	MAT'L		TITLE	CONNECTOR
CHECKED BY: Jacky Chen	DATE 03/10/22	FINISH		MODLE	USB C TYPE 180 度 2.0 Female H5.9 防水型IPX7
APPROVED BY: Tony Kao	DATE 03/10/22	SCALE	1 : 1	DWG NO.	SBC-WP160VS-20x-S165 (SIZE A4)
		SHEET NO.	1 of 1	PART NO.	SBC-WP160VS-20x-S165 (VER R1)