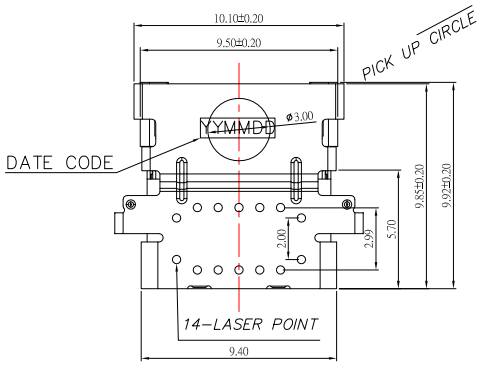

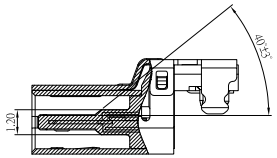

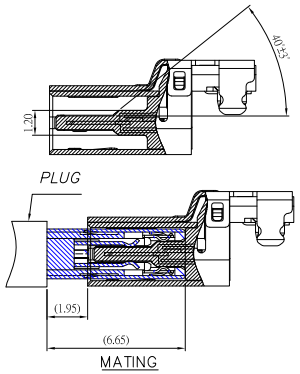

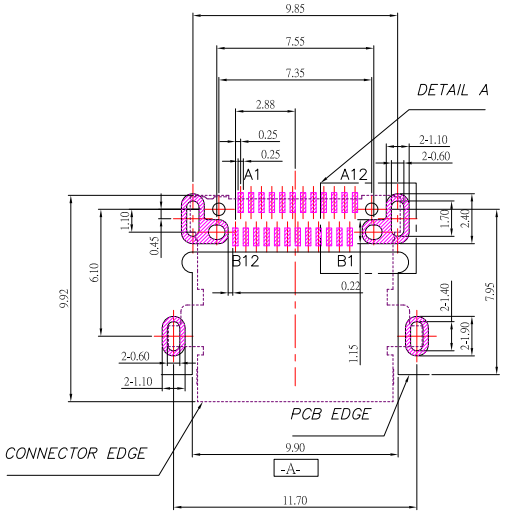

RECOMMENDED P.C.B. LAYOUT

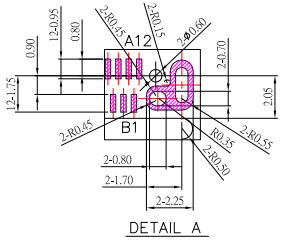

DETAIL A

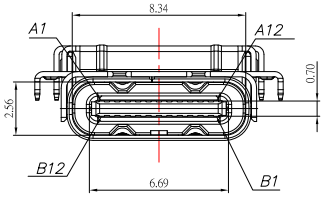

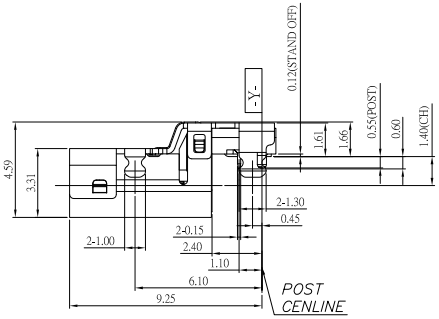

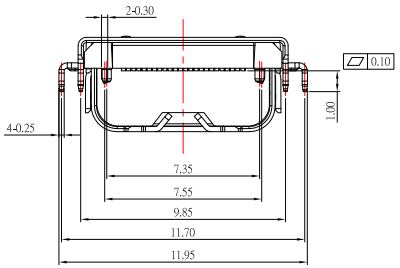

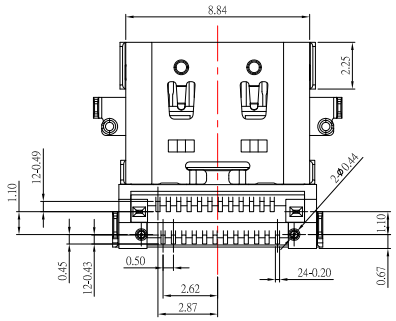

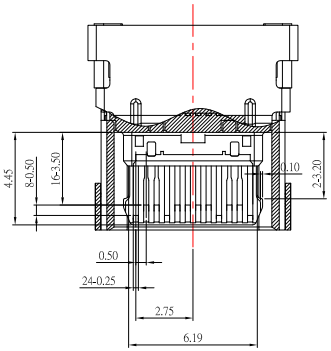

Pin	Signal Name	Mating Sequence	Pin	Signal Name	Mating Sequence
A1	GND	First	B12	GND	First
A2	SSTXp1	Second	B11	SSRXp1	Second
A3	SSTXn1	Second	B10	SSRXn1	Second
A4	V_{BUS}	First	B9	V_{BUS}	First
A5	CC1	Second	B8	SBU2	Second
A6	Dp1	Second	B7	Dn2	Second
A7	Dn1	Second	B6	Dp2	Second
A8	SBU1	Second	B5	CC2	Second
A9	V_{BUS}	First	B4	V_{BUS}	First
A10	SSRXn2	Second	B3	SSTXn2	Second
A11	SSRXp2	Second	B2	SSTXp2	Second
A12	GND	First	B1	GND	First

SPECIFICATIONS

Electrical:

1.Rating: 3.0 A

2.Dielectric Withstand Voltage: 100V AC

3.Contact Resistance: 40 mΩ Max

4.Insulation Resistance: 100 MΩ Min

Mechanical:

1.Connector Mate and Unmate Force

1.1 Mate force: 5~20 N

1.2 Unmate force: 8~20 N

Material:

1.Housing: LCP

2.Contact: C7025

3.Shell: SUS

Finish:

1.Contact: Plated Gold in Mating Area ;
Gold Plated on Solder Balls ;
Nickel under plated overall

2.Shell: Nickel under Plated surface layer

ITEM NO.	DESCRIPTION	DRAWN	DATE

東莞市高迪電子有限公司
DONG GUAN GAO DI ELECTRONICS CO., LTD

TOLERANCE UNLESS OTHERWISE STATED : Up to 5 ±0.2; Above 5 ~ 15 ±0.3; Above 15 ~ 30 ±0.4; Above 30 ~ 50 ±0.5; Angle ±0.3°

3RD. ANGEL'S

UNITS MM

DRAWN BY: Jack Lu	DATE 03/10/22	MAT'L		TITLE	CONNECTOR
CHECKED BY: Jacky Chen	DATE 03/10/22	FINISH		MODLE	USB4 GEN 3 TYPE C/F Mid Mount CH:1.4mm 30u"
APPROVED BY: Tony Kao	DATE 03/10/22	SCALE	1 : 1	DWG NO.	SBC-240M20H-453-S338
		SHEET NO.	1 of 1	PART NO.	SBC-240M20H-453-S338

SIZE A4 VER R