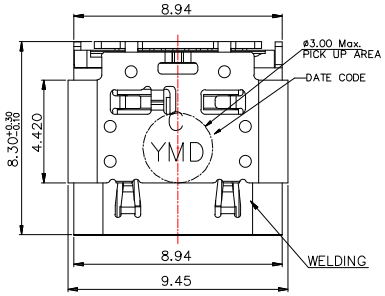

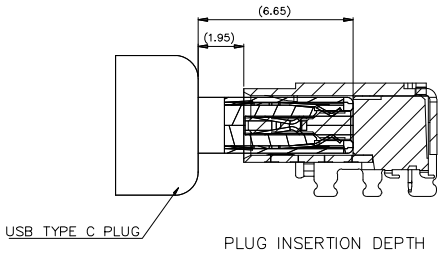

SBC-240S33-43x-S461

鍍層厚度 :

Blank : 1u"
2 : 15u"
3 : 30u"

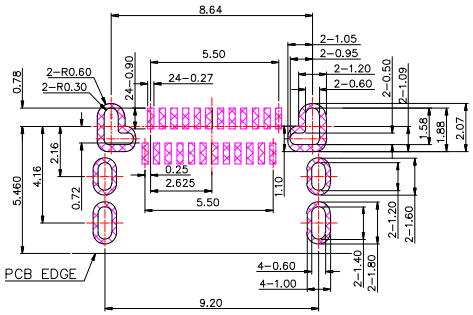

P.C.B LAYOUT

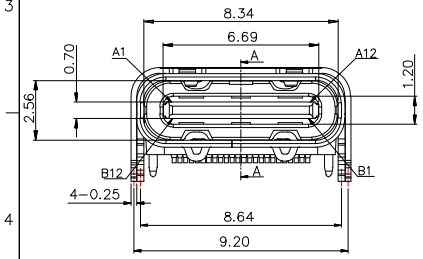

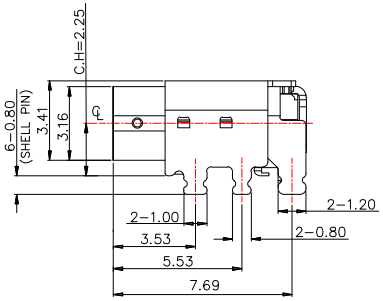

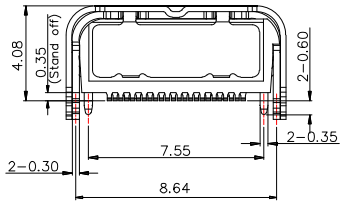

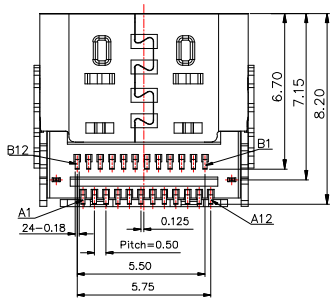

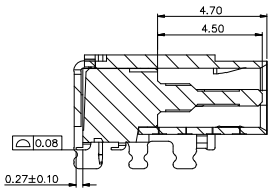

SECTION A-A

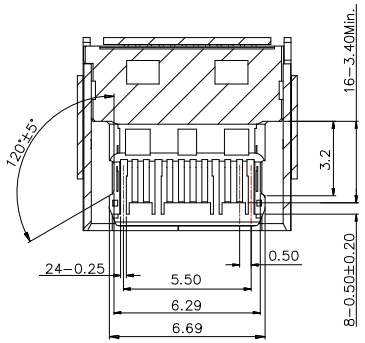

SECTION B-B

USB TYPE-C PIN ASSIGNMENTS:

A12	GND	B1	GND
A11	SSRXp2	B2	SSTXp2
A10	SSRXn2	B3	SSTXn2
A9	VBUS	B4	VBUS
A8	SBU1	B5	CC2
A7	Dn1	B6	Dp2
A6	Dp1	B7	Dn2
A5	CC1	B8	SBU2
A4	VBUS	B9	VBUS
A3	SSTXn1	B10	SSRXn1
A2	SSTXp1	B11	SSRXp1
A1	GND	B12	GND
PIN	SIGNAL NAME	PIN	SIGNAL NAME

SPECIFICATIONS

Electrical:

1. Rating: 20V ; 5.0A
2. Contact Resistance: 40 mΩ Max
3. Insulation Resistance: 100 MΩ Min
4. Dielectric Withstanding Voltage: 100V AC

Mechanical:

1. Connector Mate and Unmate Force
   1.1 Mate force: 5~20 N
   1.2 Unmate force: 8~20 N

Material:

1. Housing: PA9T
2. Contact: C19400
3. Shell: SUS

Finish:

1. Contact: Plated Gold in Mating Area ;
   Gold Plated on Solder Balls ;
   Nickel under plated overall
2. Shell: Nickel under Plated surface layer

ITEM NO.	DESCRIPTION	DRAWN	DATE
1	新增PCB LAYOUT尺寸	Jack	112421

東莞市高迪電子有限公司
DONG GUAN GAO DI ELECTRONICS CO., LTD

TOLERANCE UNLESS OTHERWISE STATED : Up to 5 ±0.2; Above 5 ~ 15 ±0.3; Above 15 ~ 30 ±0.4; Above 30 ~ 50 ±0.5; Angle ±0.3°

3RD. ANGEL'S | UNITS | MM

DRAWN BY: Jack Lu	DATE 12/07/23	MAT'L	
CHECKED BY: Jacky Chen	DATE 12/07/23	FINISH	
APPROVED BY: Tony Kao	DATE 12/07/23	SCALE 1 : 1	SHEET NO. 1 of 1

TITLE	CONNECTOR
MODLE	USB 4.0 Gen3 TYPE C 母座板上 L8.3 雙殼 板上墊高 CL 2.25mm
DWG NO.	SBC-240S33-43x-S461
PART NO.	SBC-240S33-43x-S461
SIZE	A4
VER	R