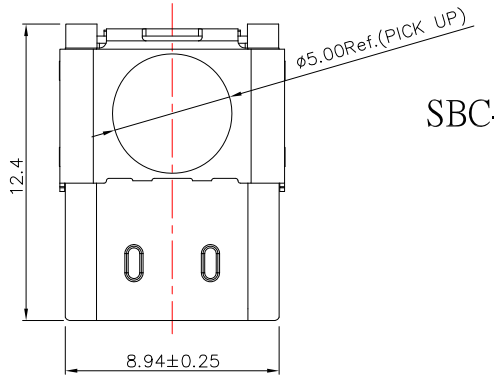

SBC-240S32A-31x-S338

鍍層厚度：

Blank : 1u"
2 : 15u"
3 : 30u"

Pin	Signal Name	Mating Sequence	Pin	Signal Name	Mating Sequence
A1	GND	First	B12	GND	First
A2	SSTXp1	Second	B11	SSRXp1	Second
A3	SSTXn1	Second	B10	SSRXn1	Second
A4	V_{BUS}	First	B9	V_{BUS}	First
A5	CC1	Second	B8	SBU2	Second
A6	Dp1	Second	B7	Dn2	Second
A7	Dn1	Second	B6	Dp2	Second
A8	SBU1	Second	B5	CC2	Second
A9	V_{BUS}	First	B4	V_{BUS}	First
A10	SSRXn2	Second	B3	SSTXn2	Second
A11	SSRXp2	Second	B2	SSTXp2	Second
A12	GND	First	B1	GND	First
SHELL		GND	SHELL		GND

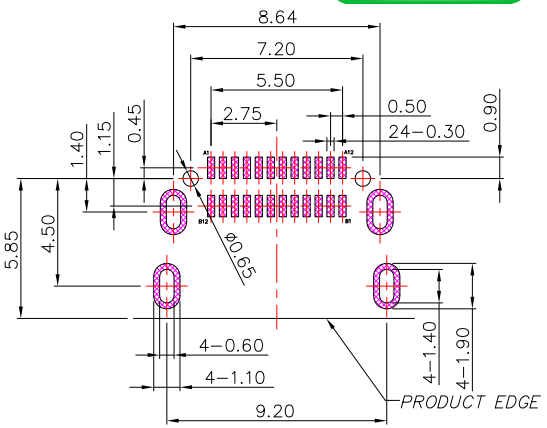

RECOMMENDED P.C.B LAYOUT (TOP VIEW)

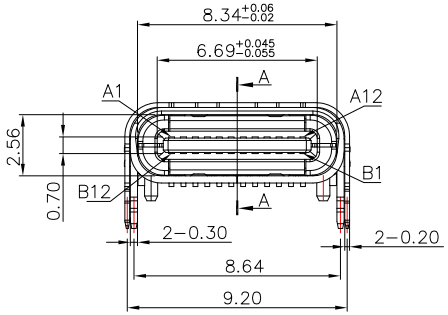

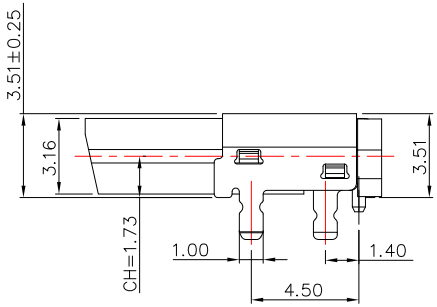

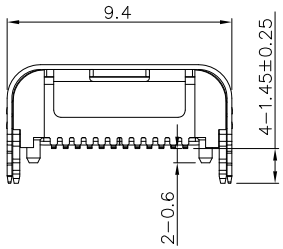

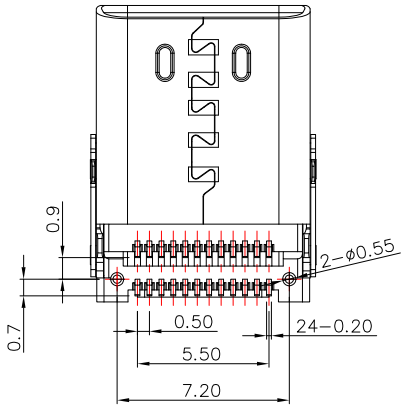

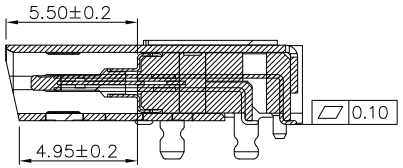

SECTION "A−A"

SPECIFICATIONS

Electrical:

1.Rating: 5.0 A for VBUS

2.Dielectric Withstand Voltage: 100V AC

3.Contact Resistance: 40 mΩ Max

4.Insulation Resistance: 100 MΩ Min

Mechanical:

1.Connector Mate and Unmate Force

1.1 Mate force: 5~20 N

1.2 Unmate force: 8~20 N

Material:

1.Housing: LCP

2.Contact: C7025

3.Shell: SUS

Finish:

1.Contact: Plated Gold in Mating Area ;

Tin Plated on Solder Balls ;

Nickel under plated overall

2.Shell: Nickel under Plated surface layer

ITEM NO.	DESCRIPTION	DRAWN	DATE

東莞市高迪電子有限公司
DONG GUAN GAO DI ELECTRONICS CO., LTD

TOLERANCE UNLESS OTHERWISE STATED : Up to 5 ±0.2; Above 5 ~ 15 ±0.3; Above 15 ~ 30 ±0.4; Above 30 ~ 50 ±0.5; Angle ±0.3°

3RD. ANGEL'S | UNITS | MM

DRAWN BY: Jack Lu	DATE 03/02/23	MAT'L		TITLE	CONNECTOR
CHECKED BY: Jacky Chen	DATE 03/02/23	FINISH		MODLE	TYPE CF 3.1 斜口雙殼板上雙排 L12.4mm
APPROVED BY: Tony Kao	DATE 03/02/23	SCALE	1 : 1	DWG NO.	SBC-240S32A-31x-S338 (SIZE A4)
		SHEET NO.	1 of 1	PART NO.	SBC-240S32A-31x-S338 (VER R)