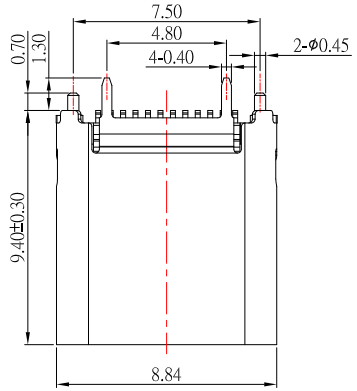


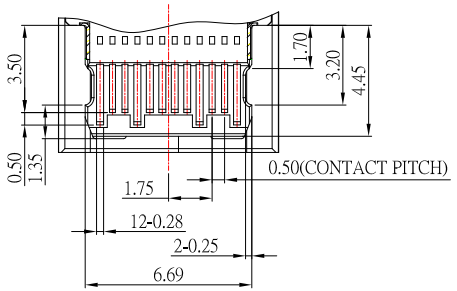


SECTION B–B

# SBC-240VSE14H-31x-S382

鍍層厚度 :

| |
|---|
| Blank : 1u" |
| 2 : 15u" |
| 3 : 30u" |

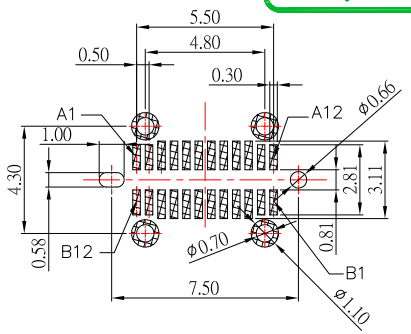


RECOMMENDED P.C.B. LAYOUT

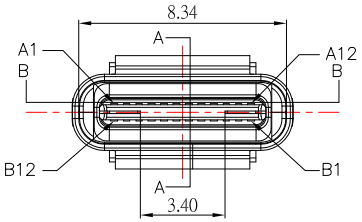


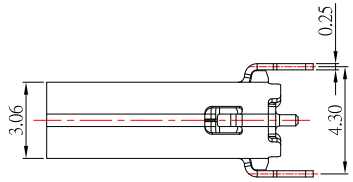


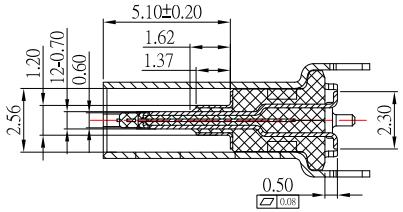


SECTION A–A

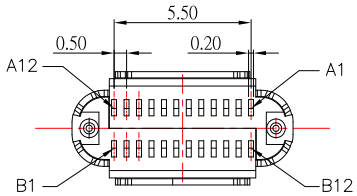


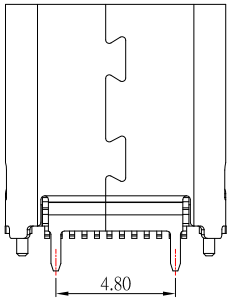


| Pin | Signal Name | Mating Sequence | Pin | Signal Name | Mating Sequence |
|---|---|---|---|---|---|
| A1 | GND | First | B12 | GND | First |
| A2 | SSTXp1 | Second | B11 | SSRXp1 | Second |
| A3 | SSTXn1 | Second | B10 | SSRXn1 | Second |
| A4 | $V_{BUS}$ | First | B9 | $V_{BUS}$ | First |
| A5 | CC1 | Second | B8 | SBU2 | Second |
| A6 | Dp1 | Second | B7 | Dn2 | Second |
| A7 | Dn1 | Second | B6 | Dp2 | Second |
| A8 | SBU1 | Second | B5 | CC2 | Second |
| A9 | $V_{BUS}$ | First | B4 | $V_{BUS}$ | First |
| A10 | SSRXn2 | Second | B3 | SSTXn2 | Second |
| A11 | SSRXp2 | Second | B2 | SSTXp2 | Second |
| A12 | GND | First | B1 | GND | First |
| SHELL | | GND | SHELL | | GND |

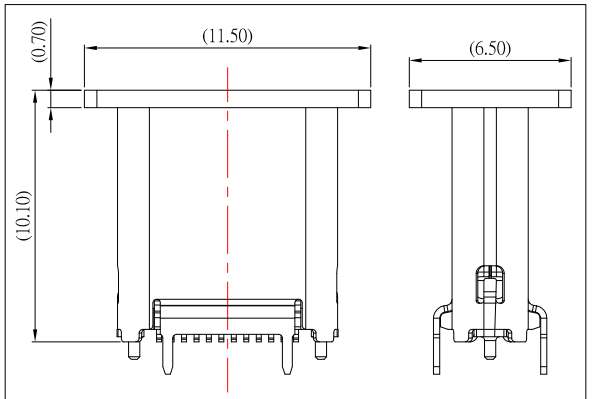


INCREASE THE DIAGRAMS OF CAP

## SPECIFICATIONS

**Electrical:**

1.Rating: 20.0V, 5.0 A

2.Dielectric Withstand Voltage: 100V AC

3.Contact Resistance: 40 mΩ Max

4.Insulation Resistance: 100 MΩ Min

**Mechanical:**

1.Connector Mate and Unmate Force

1.1 Mate force: 5~20 N

1.2 Unmate force: 6~20 N

**Material:**

1.Housing: LCP

2.Contact: C18400

3.Shell: SUS

**Finish:**

1.Contact: Plated Gold in Mating Area ;
Tin Plated on Solder Balls ;
Nickel under plated overall

2.Shell: Nickel under Plated surface layer

| ITEM NO. | DESCRIPTION | DRAWN | DATE |
|---|---|---|---|
| | | | |

東莞市高迪電子有限公司
DONG GUAN GAO DI ELECTRONICS CO., LTD

TOLERANCE UNLESS OTHERWISE STATED :
Up to 5 ±0.2
Above 5 ~ 15 ±0.3
Above 15 ~ 30 ±0.4
Above 30 ~ 50 ±0.5
Angle ±0.3°

3RD. ANGEL'S | UNITS | MM

| | | | | | |
|---|---|---|---|---|---|
| DRAWN BY: Jack Lu | DATE 08/09/23 | MAT'L | | TITLE | CONNECTOR |
| CHECKED BY: Jacky Chen | DATE 08/09/23 | FINISH | | MODLE | USB 3.1 TYPE C 直立式 SMT H9.4 mm 外殼腳長1.3 高導電銅 |
| APPROVED BY: Tony Kao | DATE 08/09/23 | SCALE | 1 : 1 | DWG NO. | SBC-240VSE14H-31x-S382 (SIZE A4) |
| | | SHEET NO. | 1 of 1 | PART NO. | SBC-240VSE14H-31x-S382 (VER R) |