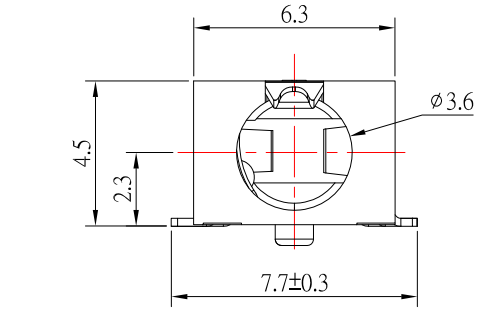


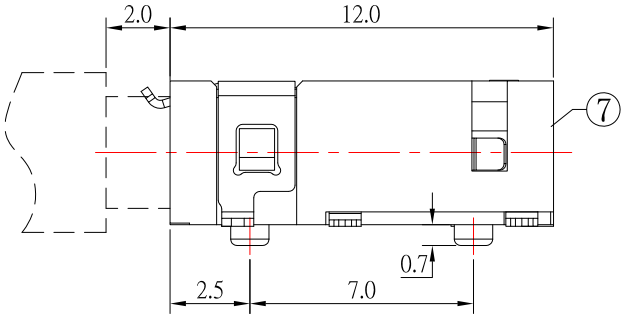


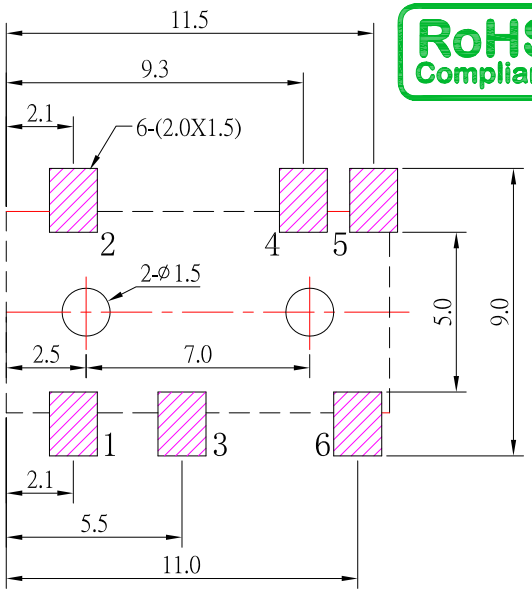


P.C.B LAYOUT
TOP VIEW

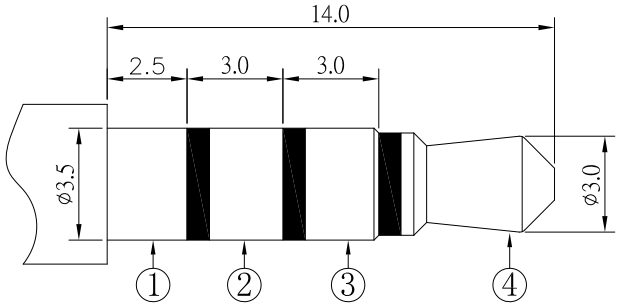


ø3.50mm 4 POLE PLUG

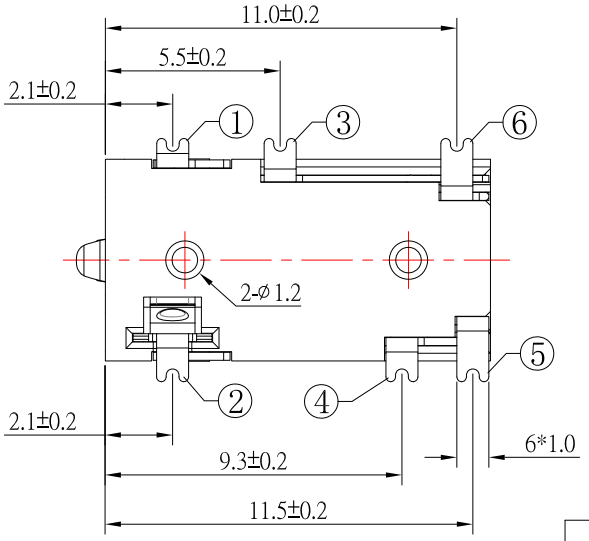


SCHEMATIC

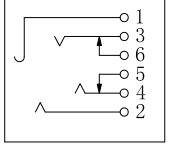


SPECIFICATION

1.Rating ：DC 30V 0.5A；
2.Contact resistance：≤ 30mΩ；
3.Insulation resistance：≥100MΩ；
4.Withstand voltage：500VAC ；
5.Insertion and extraction force：3-30N;
6.life test：5,000 cycles。

| NO. | DESCRIPTION | QTY | MATERIAL | PLATING |
|---|---|---|---|---|
| 7 | HOUSING | 1 | PA9T | |
| 6 | 6# CONTACT FOOT | 1 | PHOSPHOR BRONZE | Au-Plating |
| 5 | 5# CONTACT FOOT | 1 | PHOSPHOR BRONZE | Au-Plating |
| 4 | 4# CONTACT FOOT | 1 | PHOSPHOR BRONZE | Au-Plating |
| 3 | 3# CONTACT FOOT | 1 | PHOSPHOR BRONZE | Au-Plating |
| 2 | 2# CONTACT FOOT | 1 | PHOSPHOR BRONZE | Au-Plating |
| 1 | 1# CONTACT FOOT | 1 | PHOSPHOR BRONZE | Au-Plating |

| ITEM NO. | DESCRIPTION | DRAWN | DATE |
|---|---|---|---|
| | | | |

東莞市高迪電子有限公司
DONG GUAN GAO DI ELECTRONICS CO., LTD

TOLERANCE UNLESS OTHERWISE STATED :
Up to 5 ±0.2
Above 5 ~ 15 ±0.3
Above 15 ~ 30 ±0.4
Above 30 ~ 50 ±0.5
Angle ±0.3°

3RD. ANGEL'S | UNITS | MM

| | | | | | |
|---|---|---|---|---|---|
| DRAWN BY: Jack Lu | DATE 08/25/22 | MAT'L | | TITLE | JACK |
| CHECKED BY: Jacky Chen | DATE 08/25/22 | FINISH | | MODLE | PHONE JACK |
| APPROVED BY: Tony Kao | DATE 08/25/22 | SCALE | 1 : 1 | DWG NO. | PJ-S3142XS-S124 |
| | | SHEET NO. | 1 of 1 | PART NO. | PJ-S3142XS-S124 |

SIZE A4 | VER R