SUA-110E18-30x-S242

鍍層厚度：

Blank : 1u"
2 : 15u"
3 : 30u"

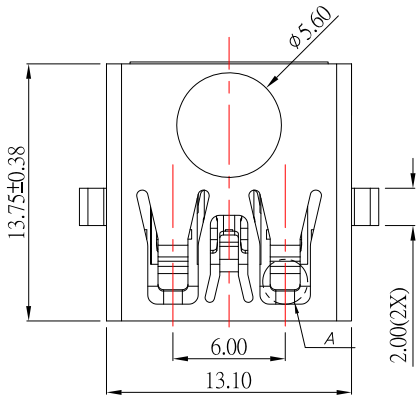

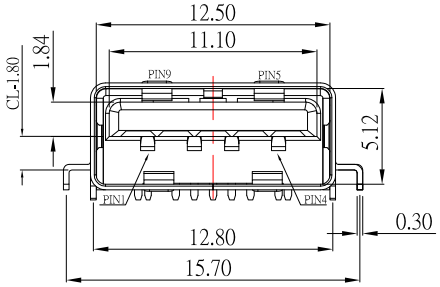

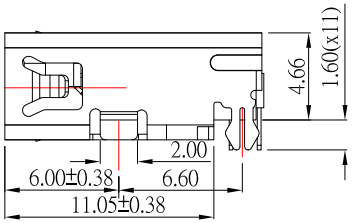

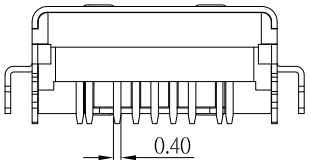

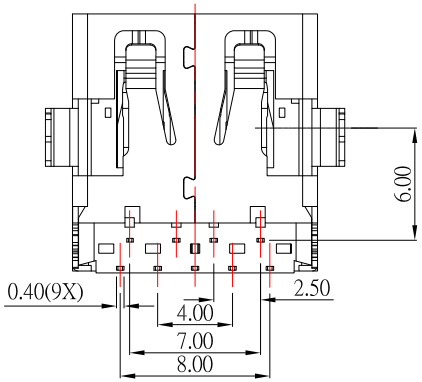

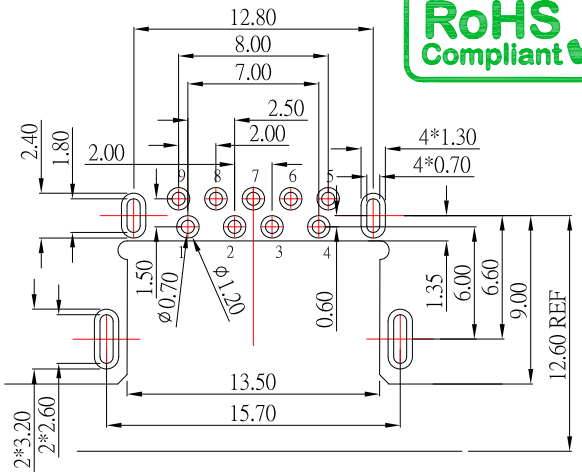

RECOMMENDED PCB LAYOUT

NOTE:

1.MATERIAL:

1.1 Housing: LCP

1.2 Contact: Phosphor Bronze

1.3 Shell: SUS201

2.Finish:

2.1 Contact: Plated Gold in Mating Area ;
Tin Plated on Solder Balls ;
Nickel under plated overall

2.2 Shell: Nickel under Plated surface layer

3.SPECIFICATION:

3.1 Rate: 30V DC , 1.5 A

3.2 Insulator Resistance:100MΩ Min

3.3 Dielectric Strength: 500V AC

3.4 Contact Resistance: 30mΩ Max

3.5 Operation Temperature: -55˚C ~ +85˚C

ITEM NO.	DESCRIPTION	DRAWN	DATE
2	新增尺寸和更新樣式	Jack	032922
1	更新樣式	Jack	032522

東莞市高迪電子有限公司
DONG GUAN GAO DI ELECTRONICS CO., LTD

TOLERANCE UNLESS OTHERWISE STATED : Up to 5 ±0.2; Above 5 ~ 15 ±0.3; Above 15 ~ 30 ±0.4; Above 30 ~ 50 ±0.5; Angle ±0.3˚

3RD. ANGEL'S | UNITS | MM

DRAWN BY: Jack Lu	DATE 03/29/22	MAT'L	
CHECKED BY: Jacky Chen	DATE 03/29/22	FINISH	
APPROVED BY: Tony Kao	DATE 03/29/22	SCALE 1 : 1	SHEET NO. 1 of 1

TITLE	CONNECTOR
MODLE	USB AF 3.0 SMT 沉板 板上H4.46mm L13.75 無捲邊
DWG NO.	SUA-110E18-30x-S242
PART NO.	SUA-110E18-30x-S242
SIZE	A4
VER	R2