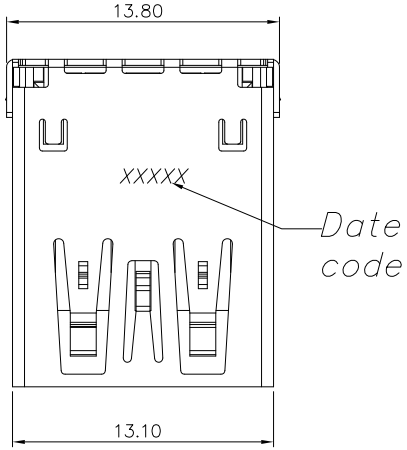

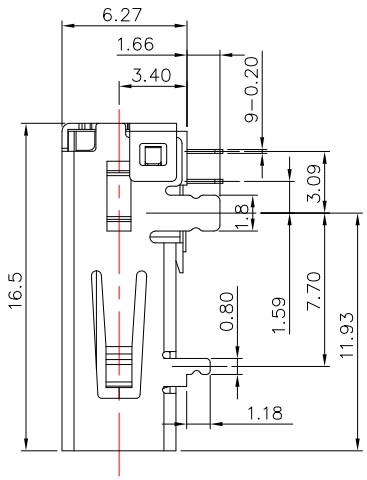

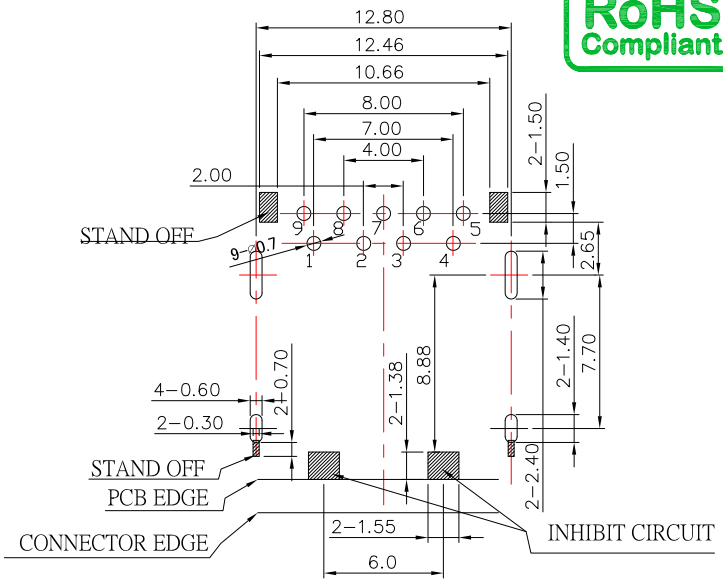

RECOMMENDED P.C.B. LAYOUT

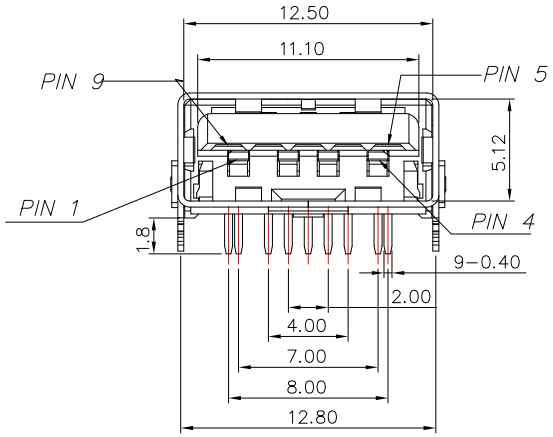

SUA-110H25-31x-S407

鍍層厚度 :

Blank : 1u"
2 : 15u"
3 : 30u"

PIN ASSIGNMENT:

Pin No.	1	2	3	4	5	6	7	8	9
Signal Name	VBUS	D−	D+	GND	SSRX−	SSRX+	GND_DRAIN	SSTX−	SS¯
Remark	USB2 Contact Pin				USB3 Contact Pin				

SPECIFICATIONS

Electrical:

1.Rating: 30 V AC, 1.8 A for VBUS and GND
0.25A for other

2.Dielectric Withstand Voltage: 100V AC

3.Contact Resistance: 30 mΩ Max

4.Insulation Resistance: 100 MΩ Min

Mechanical:

1.Connector Mate and Unmate Force

1.1 Mate force: 35N Max

1.2 Unmate force: 10 N Min

Material:

1.Housing: PA9T,Black

2.Contact: C7025

3.Shell: SUS

Finish:

1.Contact: Plated Gold in Mating Area ;
Tin Plated on Solder Balls ;
Nickel under plated overall

2.Shell: Nickel under Plated surface layer

ITEM NO.	DESCRIPTION	DRAWN	DATE

東莞市高迪電子有限公司
DONG GUAN GAO DI ELECTRONICS CO., LTD

TOLERANCE UNLESS OTHERWISE STATED : Up to 5 ±0.2; Above 5 ~ 15 ±0.3; Above 15 ~ 30 ±0.4; Above 30 ~ 50 ±0.5; Angle ±0.3°

3RD. ANGEL'S

UNITS MM

DRAWN BY: Jack Lu	DATE 01/17/22	MAT'L		TITLE	CONNECTOR
CHECKED BY: Jacky Chen	DATE 01/17/22	FINISH		MODLE	USB 3.1 AF DIP TYPE CH3.4mm
APPROVED BY: Tony Kao	DATE 01/17/22	SCALE	1 : 1	DWG NO.	SUA-110H25-31x-S407
		SHEET NO.	1 of 1	PART NO.	SUA-110H25-31x-S407

SIZE A4 VER R