SUA-110V6-32x-S277

鍍層厚度：

Blank : 1u"
2 : 15u"
3 : 30u"

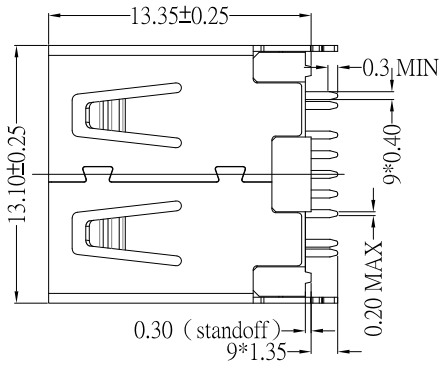

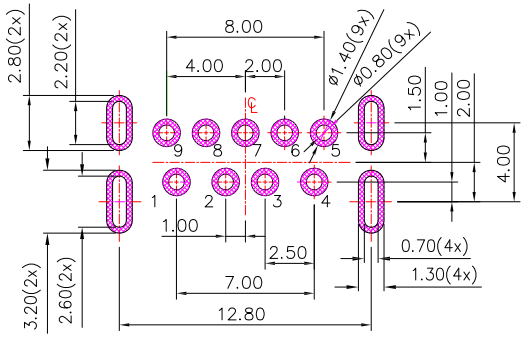

P.C.B LAYOUT MOUNTING PATTERN

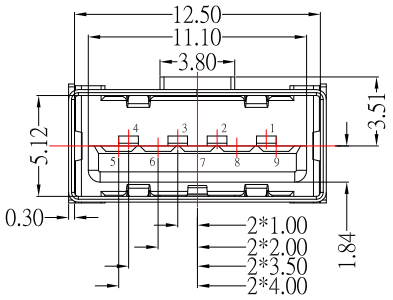

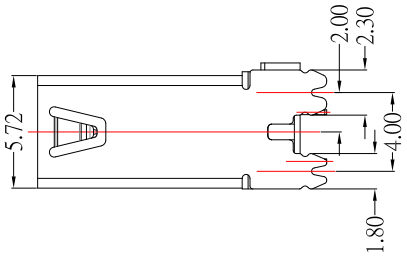

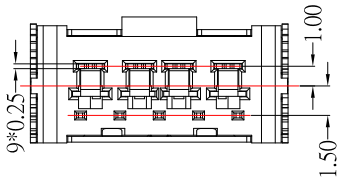

Contact Number	Signal Name
PIN1	VBUS
PIN2	D-
PIN3	D+
PIN4	GND
PIN5	StdA_SSRX-
PIN6	StdA_SSRX+
PIN7	GND_DRAIN
PIN8	StdA_SSTX-
PIN9	StdA_SSTX+
Shell	Shield

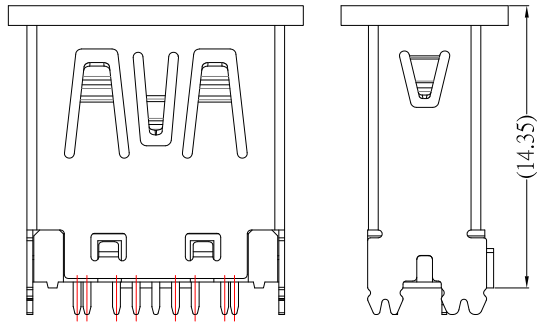

CAP示意圖

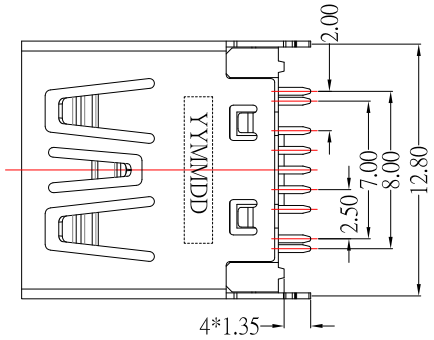

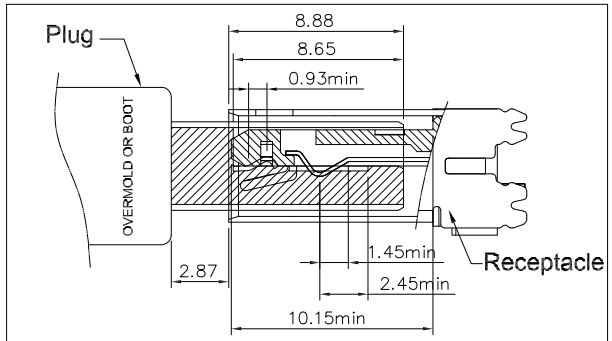

Mated Condition

1.MATERIAL:

1.1 HOUSING: LCP

1.2 CONTACT: PHOSPHOR BRONZE

1.3 SHELL: SUS

2.PLATING :

2.1 CONTACT : Plated Gold in Mating Area ;
Tin Plated on Solder Balls ;
Nickel under plated overall

2.2 SHELL: Nickel under Plated surface layer

ITEM NO.	DESCRIPTION	DRAWN	DATE

東莞市高迪電子有限公司
DONG GUAN GAO DI ELECTRONICS CO., LTD

TOLERANCE UNLESS OTHERWISE STATED : Up to 5 ±0.2; Above 5 ~ 15 ±0.3; Above 15 ~ 30 ±0.4; Above 30 ~ 50 ±0.5; Angle ±0.3°

3RD. ANGEL'S | UNITS | MM

DRAWN BY: Jack Lu	DATE 02/14/23	MAT'L		TITLE	CONNECTOR
CHECKED BY: Jacky Chen	DATE 02/14/23	FINISH		MODLE	USB A/F 180度 魚叉腳 無捲邊H:13.35mm GEN 2
APPROVED BY: Tony Kao	DATE 02/14/23	SCALE	1 : 1	DWG NO.	SUA-110V6-32x-S277 (SIZE A4)
		SHEET NO.	1 of 1	PART NO.	SUA-110V6-32x-S277 (VER R)