RoHS Compliant

PJ-D32323H-xx-S457

Color :

Black	: Blank
Pink	: PI
Blue	: BL
Green	: GR

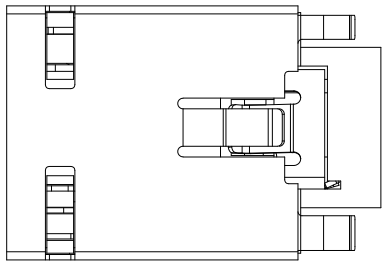

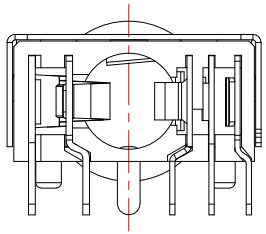

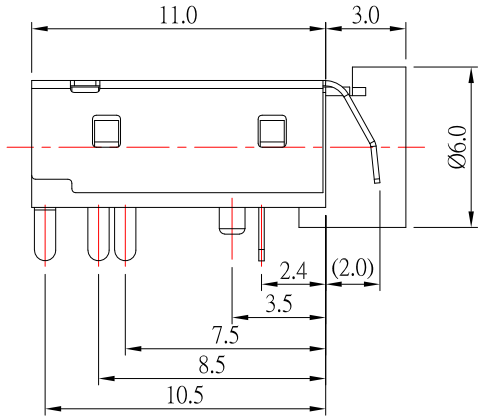

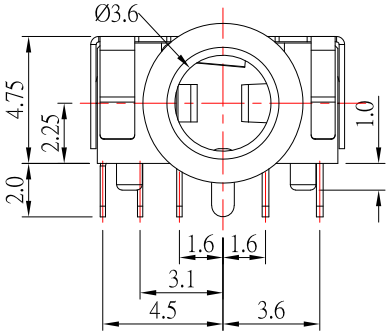

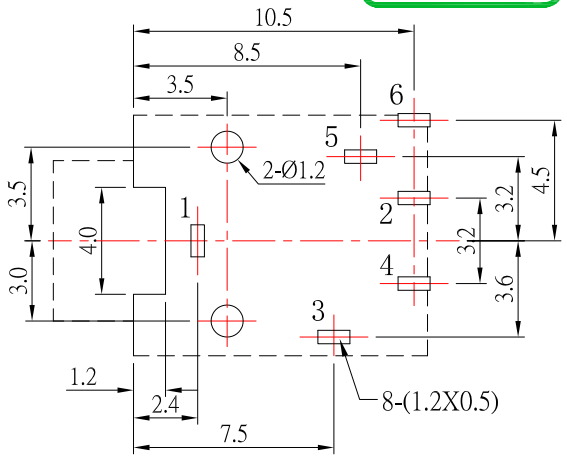

P.C.B LAYOUT
TOP VIEW

SCHEMATIC

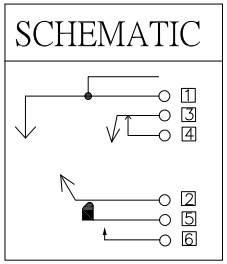

SPECIFICATION

1.Rating ：DC 30V , 0.5A

2.Contact resistance：≤30mΩ

3.Insulation resistance：≥100MΩ

4.Withstand voltage：500VAC

5.Insertion and extraction force：3-30N

6.life test：5,000 cycles

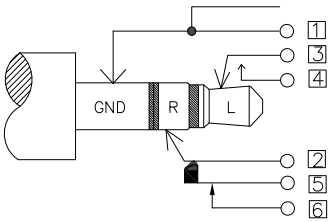

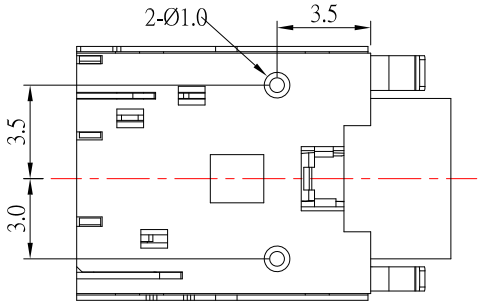

NO.	DESCRIPTION	QTY	MATERIAL	PLATING
8	SHELL	1	SUS	
7	HOUSING	1	PA9T	
6	CONTACT FOOT	1	PHOSPHOR BRONZE	Ag-Plating
5	SPRING PIECE	1	PHOSPHOR BRONZE	Ag-Plating
4	CURVE PIECE	1	PHOSPHOR BRONZE	Ag-Plating
3	SPRING PIECE	1	PHOSPHOR BRONZE	Ag-Plating
2	SPRING PIECE	1	PHOSPHOR BRONZE	Ag-Plating
1	CONTACT FOOT	1	PHOSPHOR BRONZE	Ag-Plating

ITEM NO.	DESCRIPTION	DRAWN	DATE

東莞市高迪電子有限公司
DONG GUAN GAO DI ELECTRONICS CO., LTD

TOLERANCE UNLESS OTHERWISE STATED :
Up to 5 ±0.2
Above 5 ~ 15 ±0.3
Above 15 ~ 30 ±0.4
Above 30 ~ 50 ±0.5
Angle ±0.3°

3RD. ANGEL'S | UNITS | MM

DRAWN BY: Jack Lu	DATE 05/21/25	MAT'L	
CHECKED BY: Jacky Chen	DATE 05/21/25	FINISH	
APPROVED BY: Tony Kao	DATE 05/21/25	SCALE	1 : 1
		SHEET NO.	1 of 1

TITLE	JACK		
MODLE	3.5mm PHONE JACK 6P CH:2.25 Normal Open		
DWG NO.	PJ-D32323H-xx-S457	SIZE	A4
PART NO.	PJ-D32323H-xx-S457	VER	R