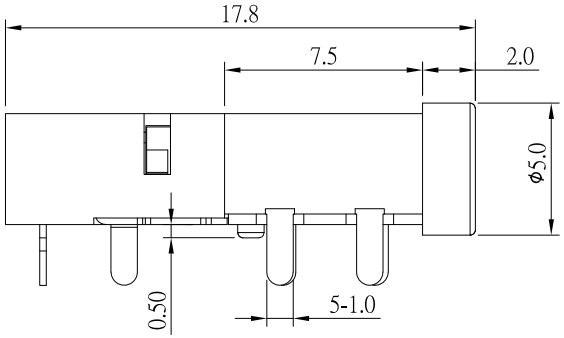

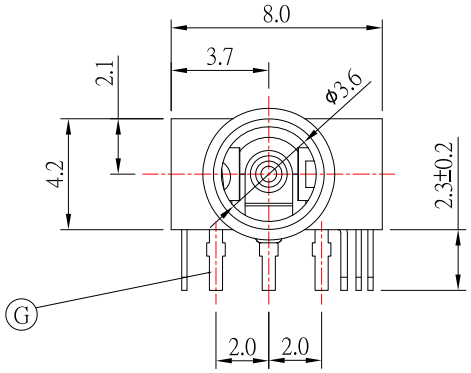

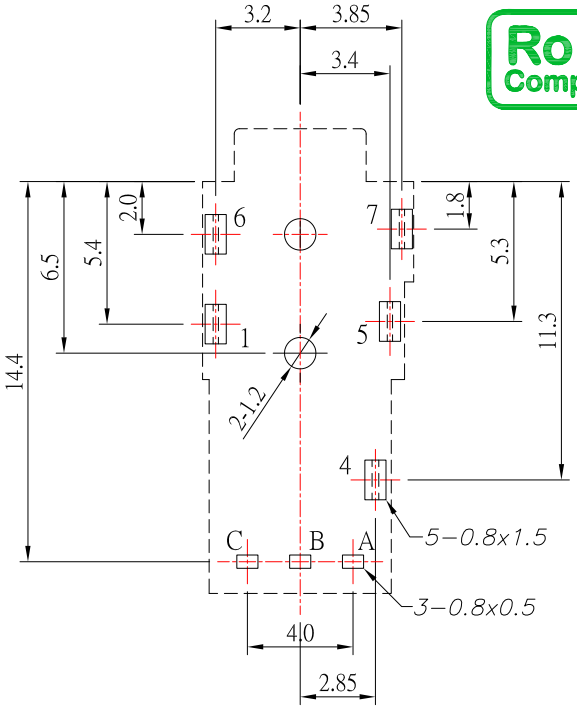

RoHS Compliant

OJ-004A-RXxx-S214

16	16 Mbps
25	25 Mbps

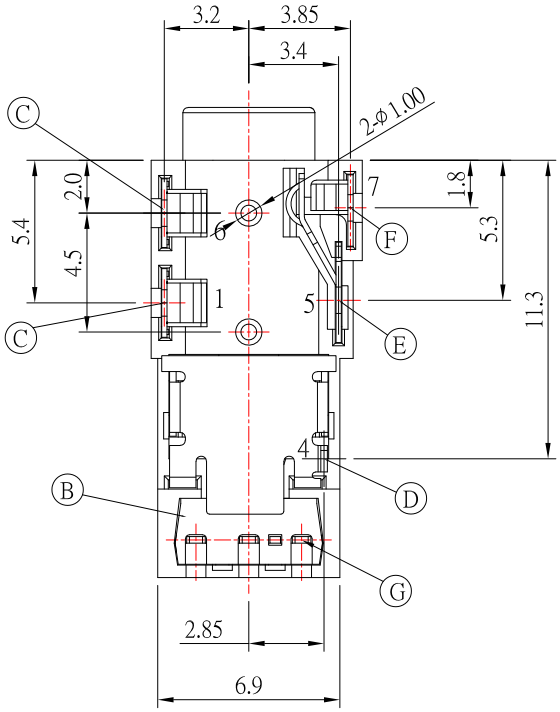

PCB LAYOUT
BOTTOM VIEW

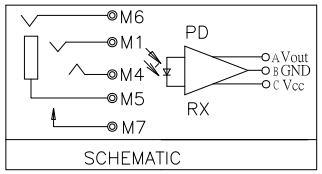

SCHEMATIC

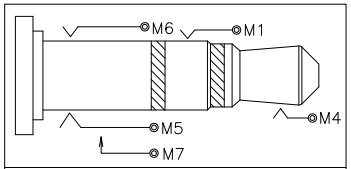

REFERENCE DRAWING

SPECIFICATIONS:

1.CONTACT RESISTANCE: 50mΩ MAX

2.INSULATION RESISTANCE: 100MΩ MIN

3.OPERATING TEMPERATURE RANGE: -25°C TO +85°C.

4. INSERTION FORCE: 3.5kg(Max).

5. EXTRACTION FORCE: 0.4~4.0kg.

ITEM	DESCRIPTIONs	MATERIAL	FINISH	Q'TY
G	DRIVE IC(TX)			1
F	M7	PHOSPHOR BRONZE	Au	1
E	M5	PHOSPHOR BRONZE	Au	1
D	M4	PHOSPHOR BRONZE	Au	1
C	M1&M6	PHOSPHOR BRONZE	Au	2
B	COVER	PA10T	BLACK	1
A	HOUSING	PA10T	BLACK	1

ITEM NO.	DESCRIPTION	DRAWN	DATE

東莞市高迪電子有限公司
DONG GUAN GAO DI ELECTRONICS CO., LTD

TOLERANCE UNLESS OTHERWISE STATED: Up to 5 ±0.2; Above 5 ~ 15 ±0.3; Above 15 ~ 30 ±0.4; Above 30 ~ 50 ±0.5; Angle ±0.3°

3RD. ANGEL'S | UNITS | MM

		DATE
DRAWN BY:	Jack Lu	09/16/25
CHECKED BY:	Jacky Chen	09/16/25
APPROVED BY:	Tony Kao	09/16/25

MAT'L		TITLE	JACK
FINISH		MODLE	OPTICAL JACK(接收端)
SCALE	1 : 1	DWG NO.	OJ-004A-RXxx-S214
SHEET NO.	1 of 1	PART NO.	OJ-004A-RXxx-S214

SIZE A4 | VER R