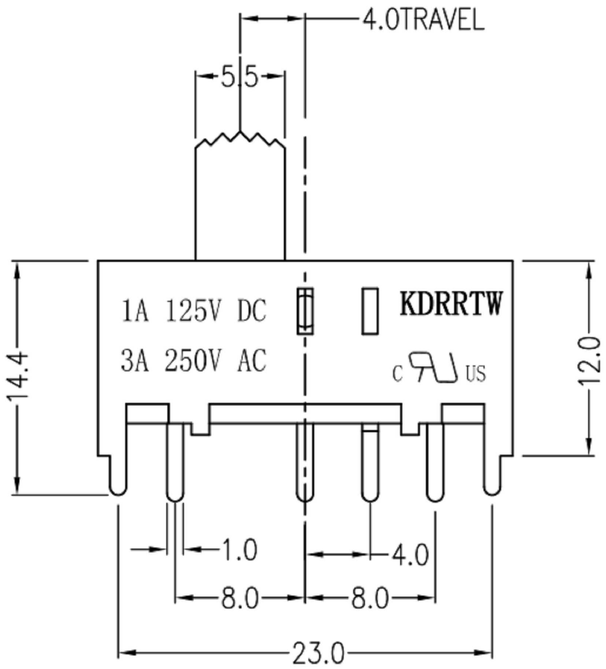

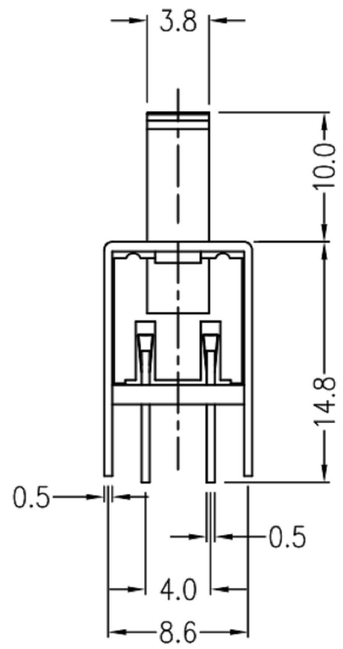

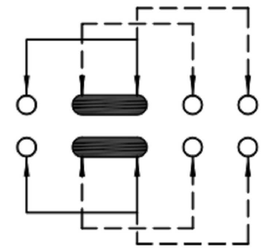

SCHEMATIC (SHORTING)

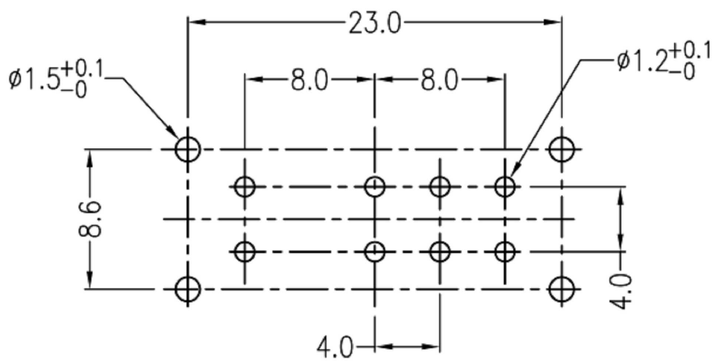

RECOMMENDED
P.C.BOARD LAYOUT

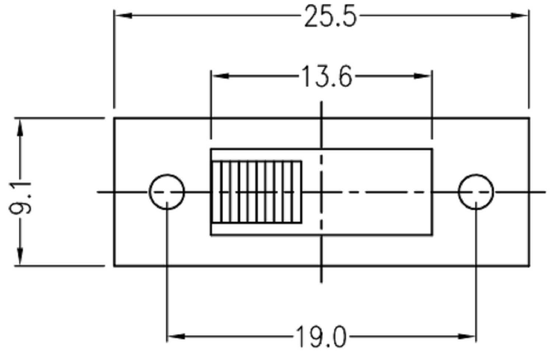

产品规格 Specifications:

Rating	1A 125V DC 3A 125V AC
Contact Resistance	100mΩ MAX
Insulation Resistanc	100MΩ MIN
Dielectric Voltage	AC 500V 1 Minute
Operating Force (gf)	250+/-100 gf
Life test without load	6000 Cycles
Practical Temperature Used	-20° C To 65° C

NO.	PARTS	MATERIALS	QTY	FINISH
5	CONTACT CLIP	PBS STRIP	1	Ag PLATED
4	TERMINAL	BRASS	3	Ag PLATED
3	BASE	PHENOLIC RESIN	1	NATURAL
2	FRAME	STEEL STRIP	1	Ni PLATED
1	KNOB	POM	1	BLACK

ITEM NO.	DESCRIPTION	DRAWN	DATE
2	新增SPEC	Jack	111914
1	新增尺寸	Jack	061614

東莞市高迪電子有限公司
DONG GUAN GAO DI ELECTRONICS CO., LTD

TOLERANCE UNLESS OTHERWISE STATED: Up to 5 ±0.2; Above 5 ~ 15 ±0.3; Above 15 ~ 30 ±0.4; Above 30 ~ 50 ±0.5; Angle ±0.3°

3RD. ANGEL'S

UNITS MM

DRAWN BY: Ming Ming Zou	DATE 11/19/14	MAT'L	
CHECKED BY: Ning Ning Su	DATE 11/19/14	FINISH	
APPROVED BY: Jia Xiang	DATE 11/19/14	SCALE	1 : 1
		SHEET NO.	1 of 1

TITLE	SWITCH
MODLE	SLIDE SWITCH
DWG NO.	GD-SS-23H01-RG10
PART NO.	
SIZE	A4
VER	R2